Circuit Diagram verification of norton's theorem

To measure I_N

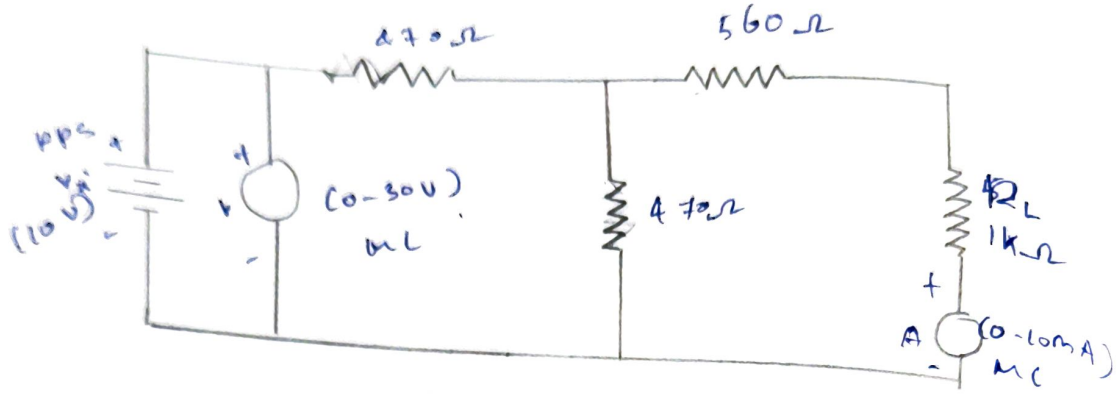

To measure R_{Th} or R_N

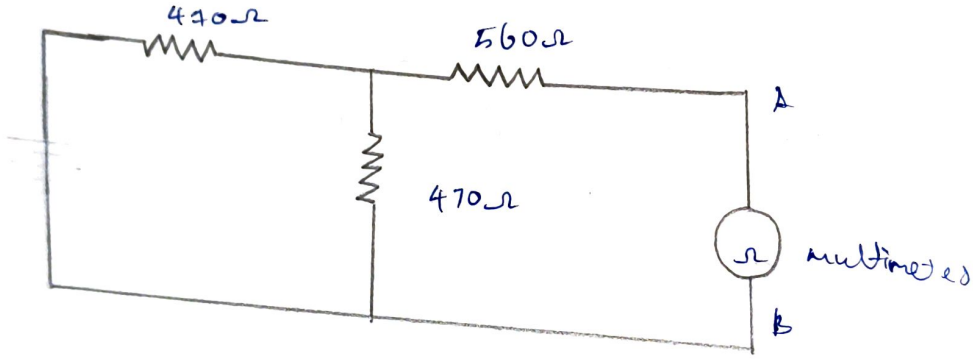

Thevenin equivalent circuit.

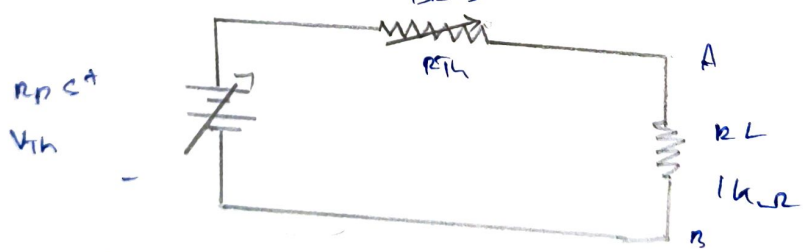

Norton's equivalent circuit.

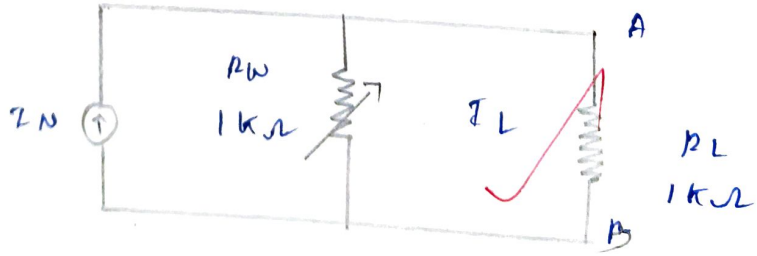

Exp No: 5
Date : 13/02/2026 , Verification of Norton's theorem

AIM:

* To verify Norton's theorem practically and theoretically for the given DC circuit

Apparatus Required:

Sl.No	Apparatus	Specification	Quantity
1.	Regulated power supply	(0-30V)	1
2.	Voltmeter	(0-30V) MC	1
3	Ammeter	(0-10mA) MC	1
4.	Resistors	470Ω 560Ω 1KΩ	2 1 1
5	Bread board	-	1
6.	Multimeter	-	1

Theory:

* Norton's theorem:-

* Norton's theorem states that, "a linear two terminal circuit can be replaced by an equivalent circuit consisting of a current source. ($I_N = I_{SC}$) in parallel with a resistor R_N. where $I_N = (= I_{SC})$

To measure I_N or I_{SC}

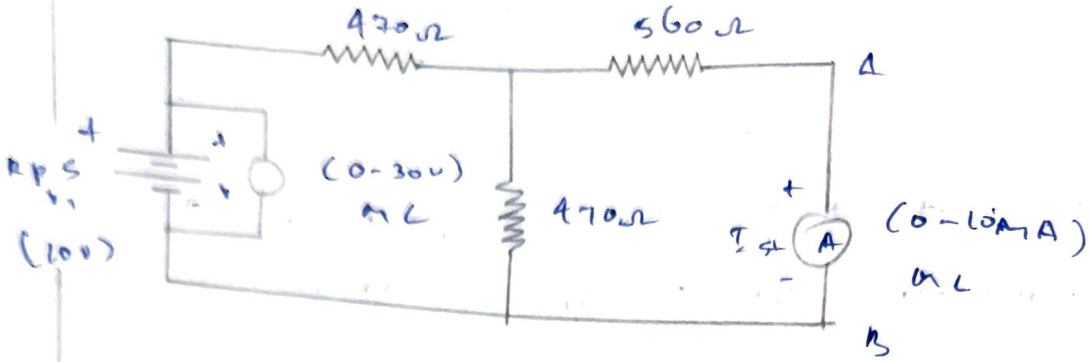

Tabular Column: 1

To measure I_L

V_1 (volts)	I_L (amps)
10 V	275mA

Tabular Column : 2

To measure R_{Th} or R_N

V_i (volts)	R_{Th} (Ω)
10 V	774

Tabular column : 3

To measure I_N or I_{SC}

V_i (volts)	I_N (amps)
10 V.	6.27 mA

Norton current, I_N or I_{SC}:

* It is the short-circuit current through the load terminals i.e, $I_N = I_{SC}$

Norton's Resistance, R_N:

* It is the Look-back resistance across the Load terminals when all the sources are replaced by their Internal resistances

Procedure:

* Make the connections as per the circuit Diagram.1
* vary the RPS and set an input voltage of 10V
* Note down the voltmeter reading (V_i) and ammeter reading (I_L) in tabular column
* switch off the supply and make connections for circuit Diagram2.
* Calculate the I_L value using the formula

$$I_L = V_{Th} / (R_{Th} + R_L)$$

Norton's theorem

$$I_L = I_N * R_N / (R_N + R_L)$$

* theoretically verify the Norton's theorem.

Model calculation:

Theoretical calculation:

Short circuit the load resistance

Measure in:

parallel

$R_{equ1} = 255.5\Omega$

$R_{equ2} = 235\Omega$

$R_{total} = 255.5 + 470\Omega$

$= 725.5\Omega$

$I_S = V/R_T = \frac{10}{25.5} = 0.013A$

$I_N = 0.013 \times \frac{470}{470+560} = 6.75mA$

To measure R_N:

$R_{equ} = 560 + 235$

$R_N = R_2 + \frac{R_1 R_3}{R_1 + R_3}$

$= 560 + 235$

$= 795\Omega$

Load current by Norrage:

$I_L = I_N \cdot \frac{R_N}{R_N + R_L}$

$= 6.75 \times \frac{795}{795+1000}$

$= 2.768 mA$

$V_L = I_L \cdot R_L$

$V_L = 2.768V$

11. calculate the I_L value using the formula Thevenin's theorem.

$$I_L = V_{th} / (R_{TH} + R_L)$$

Norton's theorem

$$I_L = I_N * R_N / (R_N + R_L)$$

12. theoritically verify the Norton's theorem.

Sl.NO	Description	marks allotted	marks obtained
1.	Experimental setup/ connection.	25 marks	20
		20 marks	20
2.	observation	20 marks	20
3.	calculation	20 marks	17
4	viva		17
5.	Record	20 marks	96

Result:

* Thus thevenin's and norton's theorem is verified practically and theoretically